GOVERNMENT OF INDIA : THE PATENT OFFICE, 214, LOWER CIRCULAR ROAD, CALCUTTA-17.

Specification No. 96605, dated 19th November 1964. Application No. 96605, dated 19th November 1964. Complete Specification left on 18th September 1965. (Application accepted 19th August 1966.)

Index at acceptance—61K[VIII].

PROVISIONAL SPECIFICATION

IMPROVEMENTS IN OR RELATING TO SPRAY DRYING TECHNIQUE WITH SPECIAL APPLICATION TO ELECTROLYTIC RECOVERY OF MAGNESIUM, MISCH METAL AND THE LIKE.

COUNCIL OF SCIENTIFIC AND INDUSTRIAL RESEARCH, RAFI MARG, NEW DELHI-1, INDIA, AN INDIAN REGISTERED BY INCORPORATED UNDER THE REGISTRATION OF SOCIETIES ACT (ACT XXI OF 1860).

The following specification describes the nature of this invention.

THIS IS AN INVENTION BY GOPALRAM JANAKIRAMAN, POONAMALLEE SRINIVASA DESIKAN AND VEERARAGHAVA ARAVAMUTHAN OF THE CENTRAL ELECTROCHEMICAL RESEARCH INSTITUTE, KARAIKUDI-3, S. RAILWAY, MADRAS STATE, INDIA, ALL INDIAN CITIZENS.

This invention relates to improvements in or relating to spray drying technique with special application to electrolytic recovery of magnesium, misch metal and the like and has reference to preparation of anhydrous salts by spray drying technique with special application to extractive metallurgy of magnesium, misch metal or the like.

Hitherto it has been proposed to have atomisers with solid shafts, a sealed shaft entry and plain cup atmosing wheels in conventional spray driers with large heights of the drier chamber.

This is open to the objection that at high temperatures, say 500°C and above, they develop mechanical troubles and economy is affected.

The object of this invention is to obviate these disadvantages. This has been achieved according to the present invention by internal cooling of the atomiser shaft, a free gasketless entry of the shaft into the drier chamber which has a large $\frac{D}{H}$ ratio and a 'dispersion' feature in the atomiser wheel.

The success of fused salt electrolysis for the production of metals like magnesium, misch metal and the like depends to a great extent on the production of anhydrous chlorides by a simple technique. A number of procedures have been evolved from time to time in which a protective atmosphere is formed while the chlorides are dehydrated such as through the use of hydrochloric acid gas, ammonium chloride or the like. Dehydration of inorganic chlorides in thin layers preferably in vacuum and drying chloride solutions by submerged combustion upto a certain stage have also been reported. Most of these procedures involve the use of costly equipment and/or time consuming. The cost of the fuel to dehydrate the chlorides is also very high and these are usually batch processes.

The idea of spray drying the inorganic chlorides of proper concentration in the presence of hot combustion gases is not new. The novelty in the spray drier designed by us comprises of :

(1) the internal cooling of the shaft of the atomiser which is capable of high speeds (well above 3,000 r.p.m. and in fact we have used 12,000 r.p.m. and temperatures of 500°C and above . This simplifies the design of the atomiser and its drive. The shaft is cooled internally by a bore in which the coolant pipe is held stationary. The discharge from the coolant pipe fills up the shaft bore and then after abstracting the heat from the shaft escapes out by sliding over a small disperser arrangement screwed on to the top end of the rotating shaft itself. The stationary block accommodating the rotating shaft houses a sump in which the coolant dispelled by the disperser is collected and drained through at the bottom. By virtue of the shaft cooling, bearings are not heated up even in prolonged runs.

(2) Elimination of a stuffing box arrangement or gland or bush for introducing the shaft of the atomiser into the spray chamber. The said arrangement are sources of trouble especially in temperatures well above 200°C. The design, as described herein includes a small clearance around the shaft. A vane arrangement fitted on to the shaft itself just above the clearance, spins also at the same speed as that of the shaft itself, is so placed that an air-cushion is created under the fan and the leakage or loss of dried product is avoided. The vane arrangement is suited to the pressure of the drying chamber.

(3) The special design of the atomiser : Though atomiser wheels (inverted saucer like cups are commonly employed this invention covers the incorporation of a 'dispersion' feature in the atomiser wheel as shown in Fig. 5 of the accompanying drawing. One or more angular cuts ranging from 30° to 120° and best near 90° creates a sudden blockade to the centrifugal spreading layer of fluids and the layer is dispersed and flung to the top cup from where the final stages of atomisation occurs.

To give a typical example, an atomiser comprising the above features was used in spraying a magnesium chloride solution of above 40 per cent concentration in admixture with small amounts of sodium and potassium chlorides into a spray chamber which was heated internally to a temperature well above 500°C by a continuous stream of combustion gases. This spray chamber itself is different from the conventional spray chamber in that,

(1) it has no conical bottom ;

(2) the ratio of $\frac{D}{H}$ (diameter of the spray chamber to the height of the spray chamber is large-say 2 and above, thereby introducing the fuel economy in evaporation ;

(3) a mechanical sweeping arrangement provided at the bottom of the spary chamber does not allow the spary dried particles to settle, thus enabling their entry into the cyclone catcher (refer sketch).

The atomiser and the drive incorporating the features in conjunction with the spray chamber mentioned in this patent worked continuously for sevaral days, without trouble.

Drawings :

(1) Atomiser Wheel

(2) Spray Chamber

(3) Atomiser Assembly

The following typical examples are given to illustrate the invention using magnesium chloride solution :

EXAMPLE 1

Inlet temperature	550°C
Outlet tenperature	255°C
Chamber pressure	60 mm. of water
Dehydrated product	$MgCl_2 \cdot 0 \cdot 65H_2O$

EXAMPLE 2

Inlet temperature	525°C
Outlet temperature	225°C
Chamber pressure	60 mm. of water
Dehydrated product	$MgCl_2 \cdot 0.38H_2O$

The following are among the noteworthy features of this invention :

(1) The design of a simple atomisre with belt driving for spraying corrosive liquids like magnesium chloride at high temperautres to get dehydrated products suitable for electorolysis.

(2) A spray chamber in which the ratio of diameter to height is greater than two and which is also provided with a bottom raking arrangement, which has no conical bottom, to collect the spray dried product in the cyclone chamber.

R. BHASKAR PAI,

Patent Officer,

Council of Scientific and Industrial Research

Dated this 6th day of November 1964.

COMPLETE SPECIFICATION.

IMPROVEMENTS IN OR RELATING TO SPRAY DRYING TECHNIQUE WITH SPECIAL APPLICATION TO ELECTROLYTIC RECOVERY OF MAGNESIUM, MISCH METAL AND THE LIKE.

COUNCIL OF SCIENTIFIC AND INDUSTRIAL RESEARCH, RAFI MARG, NEW DELHI-1, INDIA, AN INDIAN REGISTERED BODY INCORPORATED UNDER THE REGISTRATION OF SOCIETIES ACT (ACT XXI OF 1860).

The following specification particularly describes and ascertains the nature of this invention and the manner in which it is to be performed.

This is an invention by Gopalram Janakiraman, Poonamallee Srinivasa Desikan and Veeraraghava Arvamuthan of the Central Electrochemical Research Institute, Karaikudi-3, S. Railway, Madras State, India, all Indian citizens.

This invention relates to imrpovements in or relating to spray drying technique with special application electrolytic recovery of magnesium, misch metal and the like and has reference to preparation of anhydrous salts by spray drying technique with special application to extractive metallurgy of magnesium, misch metal and the like.

Hitherto it has been proposed to have atomisers with solid shafts, a sealed shaft entry and plain cup atomising wheels in conventional spray driers with large heights of the drier chamber.

This is open to the objection that at high temperatures, say 500°C and above, they develop mechanical troubles and economy is affected.

The object of this invention is to obviate these disadvantages. This has been achieved according to the present invention by internal cooling of the atomiser shaft, a free gasketless entry of the shaft into the drier chamber which has a large $\frac{D}{H}$ ratio and a 'dispersion' feature in the atomiser wheel.

The invention includes within its scope an assembly comprising an atomiser, a drive and a spray drier chamber wherein are provided an internally cooled atomiser shaft, a free gasketless entry of the shaft into the spray drier chamber which has a large $\frac{D}{H}$ ratio and a 'dispersion' feature in the atomiser wheel.

The success of used salt electrolysis for the production of metals like magnesium, misch metal and the like depends to a great extent on the production of anhydrous chlorides by a simple technique. A number of procedures have been evolved from time to time in which a protective atomosphere is formed while the chlorides are dehydrated such as through the use of hydrochloric acid gas, ammonium chloride or chlorine. Dehydration of inorganic chlorides in thin layers preferably in vacuum and drying chloride solutions by submerged combustion upto a certain stage have also been reported. Most of these procedures involve the use of costly equipment and/or time consuming. The cost of the fuel to dehydrate the chlorides is also very high and these are usually batch processes.

The idea of spray drying the inorganic chlorides of proper concentration in the presence of hot combustion gases is not new. The novelty in the spray drier designed by us comprises of :

(1) the internal cooling of the shaft of the atomiser which is capable of high speeds (well above 3,000 r.p.m. and in fact we have used 12,000 r.p.m. and temperatures of 500°C and above). This simplifies the design of the atomiser and its drive. The shaft is cooled internally by a bore in which the coolant pipe is held stationary. The discharge from the coolant pipe fills up the shaft bore and then after abstracting the heat from the shaft escapes out by sliding over a small disperser arrangement screwed on to the top end of the rotating shaft itself. The stationary block accommodating the rotating shaft houses a sump in which the coolant dispelled by the disperser is collected and drained through at the bottom. By virtue of the shaft cooling, bearings are not heated up even in prolonged runs. An arrangement such as the one mentioned in this invention has not so far been published.

(2) Elimination of a stuffing box arrangement or gland or bush for introducing the shaft of the atomiser into the spray chamber. The said arrangements are sources of troubles especially in temperatures well above 200°C. The design, as described in this patent, includes a small clearance around the shaft. A vane arrangement fitted on to the shaft itself just above the clearance, spins also at the same speed as that of the shaft itself, is so placed that an air-cushion is created under the fan and the leakage or loss of dried product is avoided. The vane arrangement is suited to the pressure of the drying chamber.

(3) The special design of the atomiser : Though atomiser wheels (inverted saucer like cups) are commonly employed, this invention covers the incorporation of a 'dispersion' feature as shown in the accompanying drawing. One or more angular cuts ranging from 30° to 120° and best near 90° creates a sudden blockade to the centrifugal spreading layer of fluids and the layer is dispersed and flung to the top cup from where the final stages of atomisation occurs.

The invention has been illustrated with the help of drawings accompanying the provisional specification and the accompanying drawings wherein the description of the figures is as follows :—

Provisional Specification :

Fig. 1 : a plan view of the atomiser wheel ;

Fig. 2 : a sectional front elevation of the atomiser wheel ;

Fig. 3 : a spray drying chamber—sectional front elevation ;

Fig 4 : sectional plan of the spray drying chamber.

Complete Specification :—

Fig. 1 : plan view of the atomiser wheel ;

Fig. 2 : sectional front elevation of the atomiser wheel ;

Fig. 3 : revised version of spray drying chamber—sec sectional front elevation ;

Fig. 4 : sectional plan of revised version of spray drying chamber ;

Fig. 5 : atomiser assembly—sectional front elevation.

(ii) The parts represetned by numerals in the drawings accompanying the complete specification are as follows :—

1. Atomiser outer disc
2. Atomiser inner disc
3. Atomiser set screws
4. Spray drier inner chamber
5. Spray drier outer casing
6. Sweeper arm
7. Sweeper arm bearing housing
8. Sweeper arm shaft
9. Flexible coupling } (see Fig. 3 of drawings accompanying the Provisional Specification.)
10. Reduction gear unit } (see Fig. 3 of drawings accompanying the Provisional Specification.)
11. Spray drier inelt pipe
12. Spray drier outlet pipe
13. Atomiser cooling pipe
14. Grip nut
15. Water sump lid
16. Coolant diffuser
17. Sump block
18. Atomiser shaft
19. Top pillar nuts
19A, B, C and D.
20. Top pillar
21. Top bearing case
22A and B. Pulley checknuts
23. Pulley
24. Bearing case cover screw
25. Bottom bearing
26. Bottom bearing house
27. Top bearing
28. Bottom pillar
29A, B, C and D. Bottom pillar checknuts
30. Bottom bearing case top plate
31. Atomiser base plate
32. Cushion impeller
33. Cushion impeller checknuts
34. Atomiser disc
35. Atomiser disc nuts
36. Feed pipe casing
37. Feed pipe
38A, B and C. Feeding pipe hollow nuts.

(iii) Description of the spray drier assembly :

An outline of the spray drier assembly can be seen in Figs. 3 and 4. The spray drier unit consists of a drying chamber (4), a centrifugal atomiser assembly (Fig. 5) mounted on the top of the chamber and a sweeping device (6, 7, 8) at the bottom of the chamber. The spray chamber is a cylindrical metallic chamber with comparatively large diameter and low height and is prvoided with a concentric outer casing (5). Between the outer wall (5) and inner wall (4) of the spray chamber heat insulation material is filled in. Two pipes (11) and (12) for the entry and exit respectively of hot combustion gases or hot air are provided tangentially at the top and bottom of the spray chamber.

The atomiser assembly is mounted centrally at the top of the spray chamber. The atomiser unit consists of an atomiser wheel which can be a plain disc or one of a design as indicated in (Figs. 1 and 2). This particular atomiser wheel consists of an outer piece (1) and an inner piece (2) in the shapes indicated in Figures 1 and 2 screwed together by four sets screws (3). The atomiser wheel is screwed to the atomiser shaft (18) which is mounted through two ball bearings (25, 27) and is connected to a driving mechanism through a V groove pulley (23) fixed between the two ball bearings (25, 27). The atomiser shaft (18) has a hollow portion extending from the top to the position of bottom bearing (25) through which a cooling water pipe (13) is itroduced and fixed by means of a grip nut (14). During the running of the atomiser, water is introduced through this pipe (13) which comes out and gets diffused by the diffuser (16) and falls into the sump (17) and gets out through an outlet pipe (not shown in the figure). The atomiser assembly is mounted on a bottom plate (31) which is screwed to the top of the spray chamber (4). The plate (30) holding the bottom bearing (25) and its casing (26) is mounted above the bottom plate (31) and is held in position by four pillars (28). Similarly the top bearing (27) and the cooling water sump (17) is held in position above the top plate (30) by means of four pillars (20). At the portion where the shaft (18) passes into the spray chamber (4) a cushion impeller (32) is fixed by means of two screws (33A and 33B) in order to prevent the hot flue gases leaking through the hole through with the shaft (18) passaes. The feed solution which is to be spray dried is intorduced in the centre of the atomiser wheel (34) by means of a tube (37) rigidly fixed by check nuts (38A, B, C) in an outer pipe (36).

A sweeping mechanism consisitng of a blade (6) mounted on a shaft (8) and driven (see Fig. 3 of drawings accompanying the provisional specification) by a suitable motor and reduction gear unit 10, Fig. 3, provisional specification at a very low revolution rate is provided at the bottom of the spary chamber (4).

(iv) Operation :

During the operation, the generator of hot flue gases (not shown) is switched on and inrtoduced into the chamber through the inlet pipe (11) and the outlet temperature is allowed to increase to the desired limit. Simultaneously the atomiser driving mechanism is started and allowed to rotate at high speeds. When the desired temperature is reached the feed solution is introduced through the tube (37) at predetermined rates at the centre of the atomiser wheel (34). The sweeping device (6) is also allowed to roate at low revolution rate. The solution gets diffused into a fine spray and gets immediately dried due to the hot gases which passes at high velocity. The dried particles and resultant water vapour is carried along with the exit gases through the outlet (12) and reaches a cyclone chamber of conventional type (not shown) where the dried particles get separated from the gases.

To give typical example, an atomiser comprising the above features was used in spraying a magnesium chloride solution of above 40 per cent concentration in admixture with small amounts of sodium and potassium chlorides into a spray chamber which was heated internally to a temperature well above 500°C by a continuous stream of combustion gases. This spary chamber itself is different from the conventional spary chamber in that,

(1) it has no conical bottom ;

(2) the ratio of $\frac{D}{H}$ (diameter of the spary chamber to the height of the spray chamber) is large, say 2an d above, thereby introducing the fuel economy in evaporation ;

(3) a mechanical sweeping arrangement provided at the bottom of the spray chamber does not allow the spray dried particles to settle, thus enabling their entry into the cyclone catcher (refer sketch).

The atomiser and the drive incorporating the features in conjunction with the spray chamber mentioned in this invention worked continuously for several days, without trouble.

The following typical examples are given to illustrate the invention using magnesium chloride solution :

EXAMPLE 1.

Inlet temperature . . .	500°C
Outlet temperature . .	255°C
Chamber pressure . . .	60 mm of water
Dehydrated product . .	$MgCl_2 \cdot 0.65H_2O$

EXAMPLE 2.

Inlet temperature . . .	525°C
Outlet temperature . .	225°C
Chamber pressure . . .	60 mm of water
Dehydrated product . .	$MgCl_2 \cdot 0{\cdot}38H_2O$

The following are among the noteworthy features of this invention :

(1) The design of a simple atomiser with belt driving for spraying corrosive liquids like magnesium chloride at high temperatures to get dehydrated products suitable for electrolysis.

(2) A spray chamber in which the ratio of diameter to height is greater than two and which is also provided with a bottom raking arrangement, which has no conical bottom, to collect the spray dried product in the cyclone chamber.

We claim :

1. An improved spray drying process to obtain products suitable for use in the electrolytic recovery of a magnesium, misch metal and the like, characterised by internal cooling of the atomiser shaft, a free gasketless entry of the shaft into the drier chamber which has a large $\frac{D}{H}$ ratio and a 'dispersion' means in the atomiser wheel.

2. A process as claimed in Claim 1, wherein is used an atomiser shaft capable of high speeds(well above 3,000r.p m. *e.g.*, 12,000 r.p.m. and temperatures of 500°C and above).

3. A process as claimed in Claim 1 or 2 wherein the shaft is cooled internally by a bore in which the coolant pipe is held stationary, the discharge from the coolant pipe fills up the shaft bore and then after abstracting the heat from the shaft escapes out by sliding over a small disperser arrangement a screwed on to the top end of the rotating shaft itself.

4. A process as claimed in any of the preceding claims wherein the stationary block accommodating the rotating shaft houses a sump in which the coolant dispelled by the disperser is collected and drained through at the bottom.

5. A process as claimed in any of the preceding claims wherein a small clearance around the shaft and a vane arrangement fitted on to the shaft itself just above the clearance, spins also at the same speed as that of the shaft itself, is so placed that an air-cushion is created under the fan and the leakage or loss of dried product is avoided.

6. A process as claimed in any of the preceding claims, wherein a 'dispersion' means is incorporated, as shown in Figure 5, sheet No. 3 of the provisional specification, and one or more angular cuts ranging frmo 30-120°C and best near 90° creating a sudden blockade to the centrifugal spreading layer of fluids and the layer being dispersed and flung to the top cup from where the final stages of atomisation occurs.

7. A process as claimed in any of the preceding claims wherein a magnesium chloride solution of 40 per cent concentration and above in admixture with small amounts of sodium and potassium chlorides is sprayed into a spray chamber heated internally to a temperature well above 500°C by a continuous stream of combustion gases.

8. A process as claimed in any of the preceding claims wherein the spary chamber—

(i) has no conical bottom ;

(ii) the ratio of $\frac{D}{H}$ (diameter of the spary chamber to the height of the spray chamber) is large, say 2 and above ,

(iii) a mechanical sweeping arrangement provided at the bottom of the spary chamber (Fig. 5, sheet No. 3 of the provisional specification) does not allow the spary dried particles to settle, thus enabling their entry into the cyclone catcher.

9. Spray drying process to obtain products suitable for use in the electrolytic recovery of magnesium, misch metal and the like substantially as hereinbefore described in the examples.

10. An assembly for carrying out a spray drying process as claimed in any of the preceding claims comprising an atomiser, a drive and a spray drier chamber wherein are provided an internally cooled atomiser shaft, a free gasketless entry of the shaft into the spray drier chamber which, has a large $\frac{D}{H}$ ratio and a 'dispersion' feature in the atomiser wheel.

11. An assembly comprising an atomiser, a drive and a spray chamber substantially as hereinbefore described.

R. Bhaskar Pai,

Patent Officer,

Council of Scientific and Industrial Research.

Dated this 6th day of September 1965.

GMGIPC—S15—8 Patent/67 7-7-69—100

PROVISIONAL SPECIFICATION

COUNCIL OF SCIENTIFIC & INDUSTRIAL RESEARCH.

No. 96605

No. OF SHEETS :- 3.
SHEET No. :- 1.

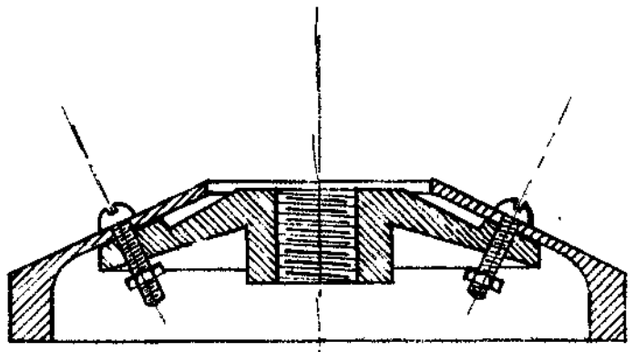

SECTION AT 'AA'

FIG. 2

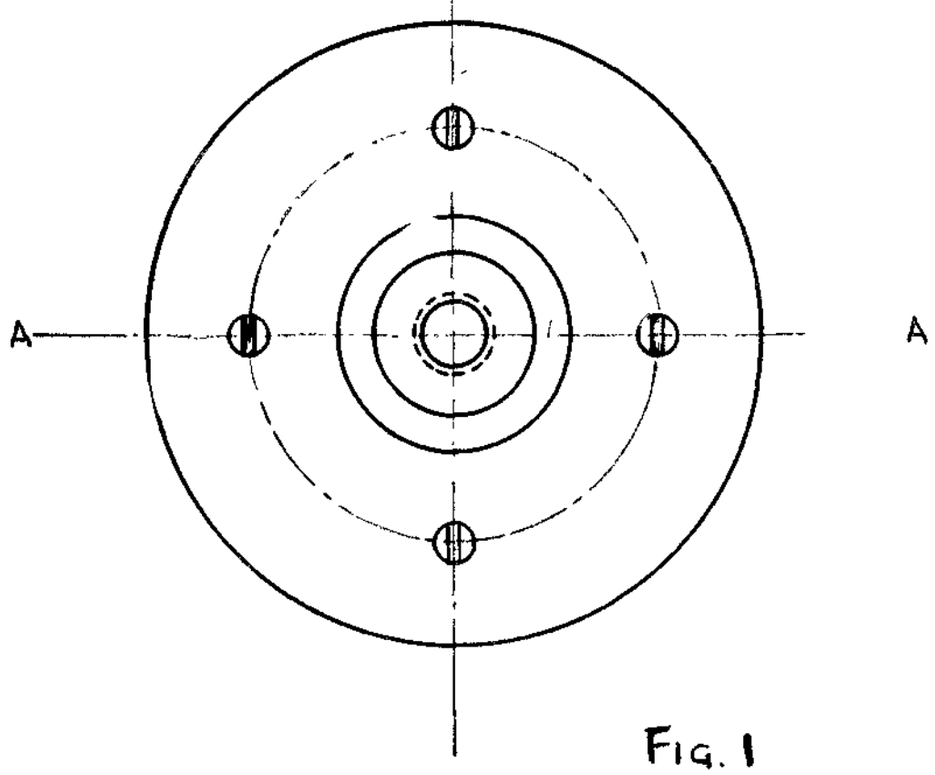

FIG. 1

R B Pai

(R.B PAI)
PATENTS OFFICER,
C.S.I.R.

DIPTI PRINTING CAL 4 P-II/D/7/69 (Part-17) 104 Copies

COMPLETE SPECIFICATION

COUNCIL OF SCIENTIFIC & INDUSTRIAL RESEARCH

No. 96605

NO. OF SHEETS :- 3

SHEET No :- 1

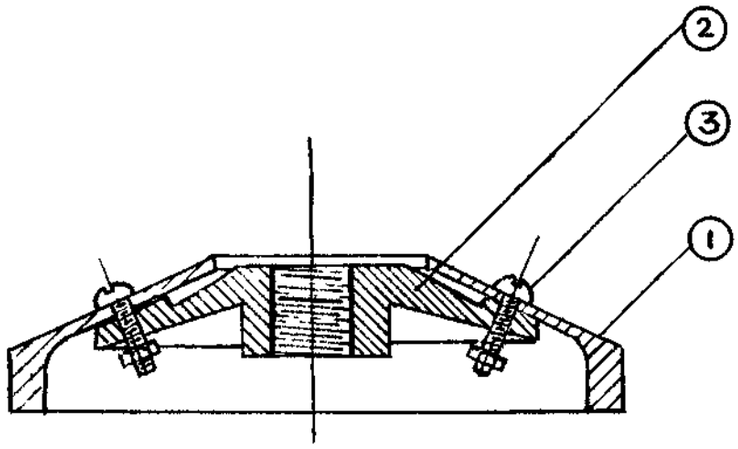

SECTION AT 'AA'

FIG. 2

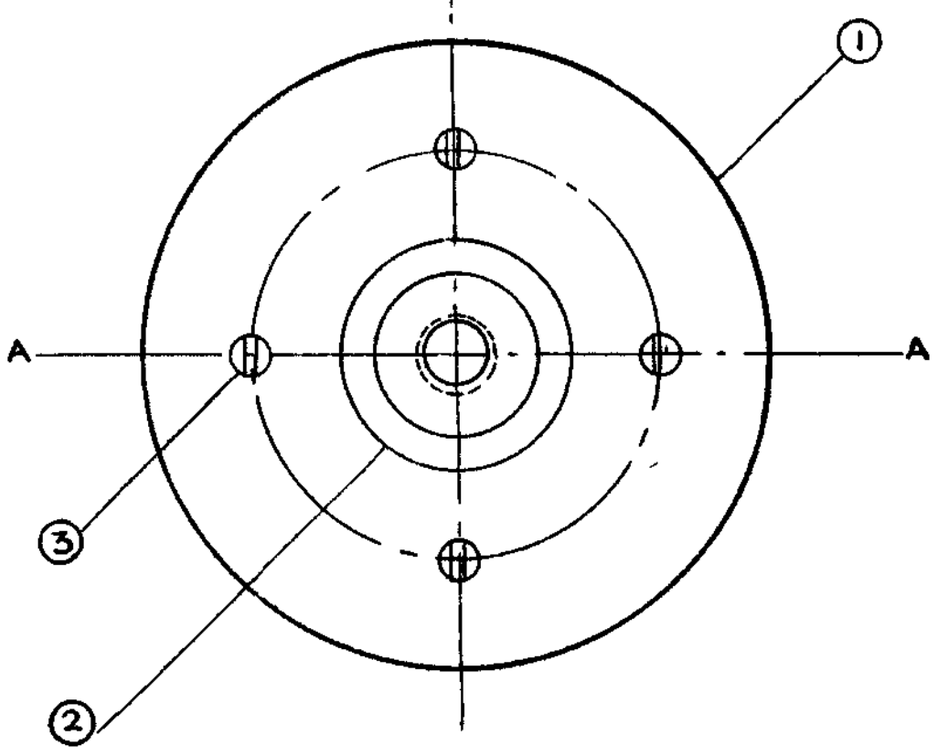

FIG. 1.

R B Pai

(R.B. PAI)
PATENTS OFFICER,
C.S.I.R.

DIPTI PRINTING CAL.-4. P.11/D/7/69 (Part 17) 104 Copies

PROVISIONAL SPECIFICATION

CONCIL OF SCIENTIFIC & INDUSTRIAL RESEARCH.

No-96605

No. OF SHEETS :- 3

SHEET No. :- 2.

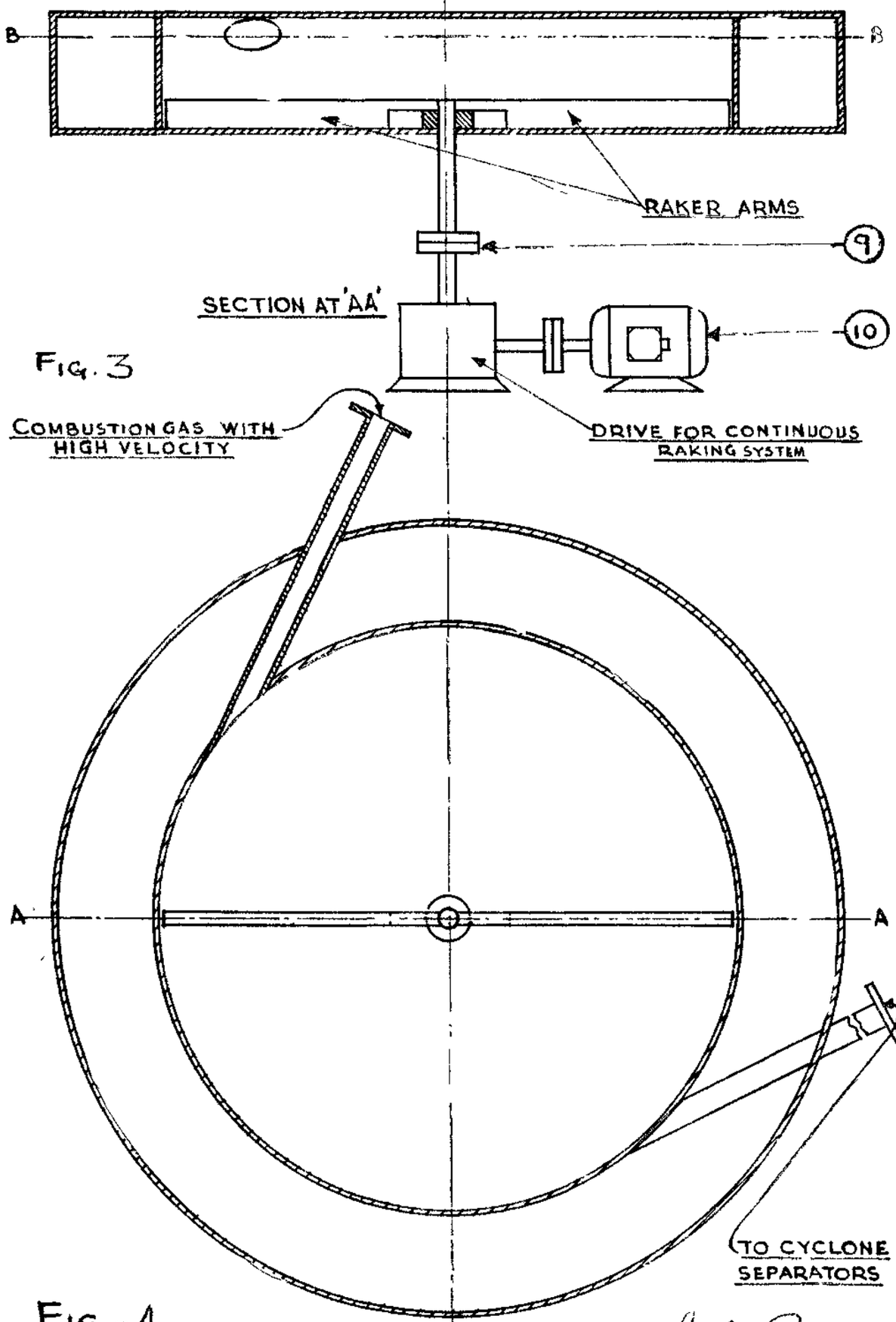

FIG. 3

FIG - 4

(R.B. PAI)
PATENTS OFFICER,
C.S.I.R.

DIPTI PRINTING CAL -4. P-II/D 7/69 (Part-17) 104 Copies

COMPLETE SPECIFICATION

COUNCIL OF SCIENTIFIC & INDUSTRIAL RESEARCH.

No. 96605

No. OF SHEETS: 3

SHEET No...: 2

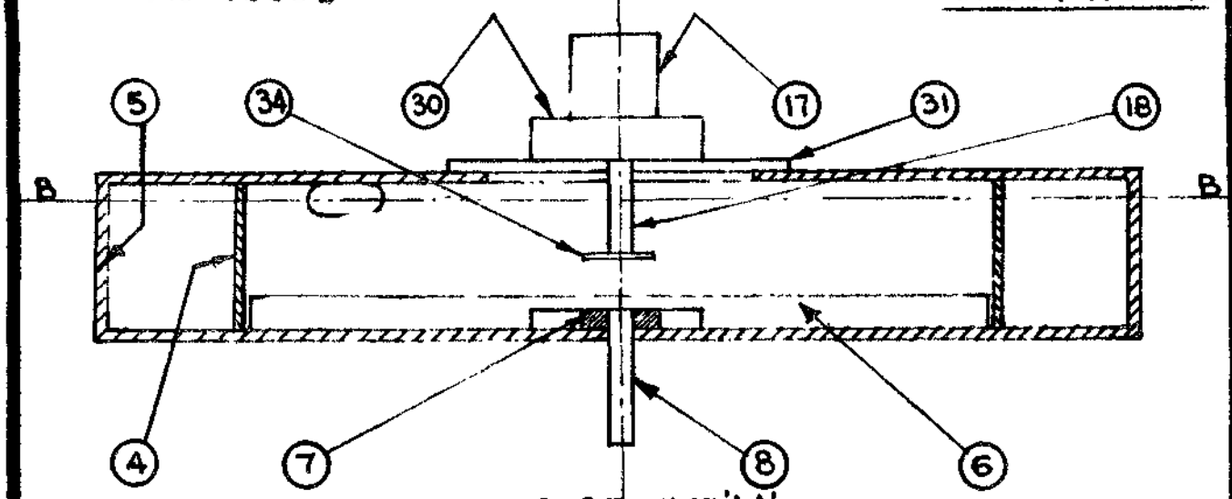

SECTION AT 'AA'

Fig. 3.

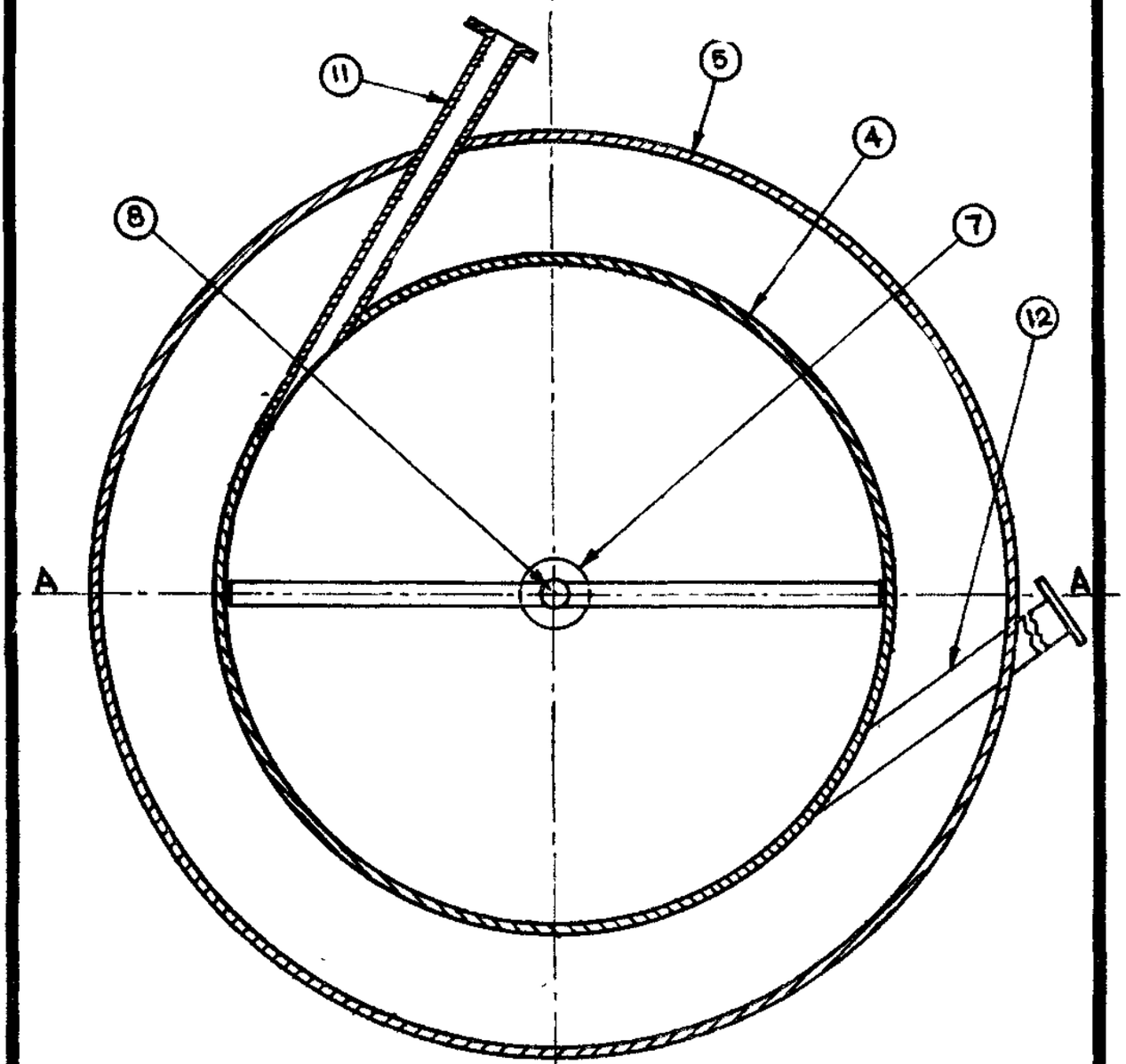

SECTION AT 'BB'

Fig. 4

R B Pai

(R. B. PAI)
PATENTS OFFICER
C.S.I.R.

P-II/D 7/69 (Part-17) 104 Copies

COMPLETE SPECIFICATION.

COUNCIL OF SCIENTIFIC & INDUSTRIAL RESEARCH

No. 96605

No. OF SHEETS : 3

SHEET No. . . : 3

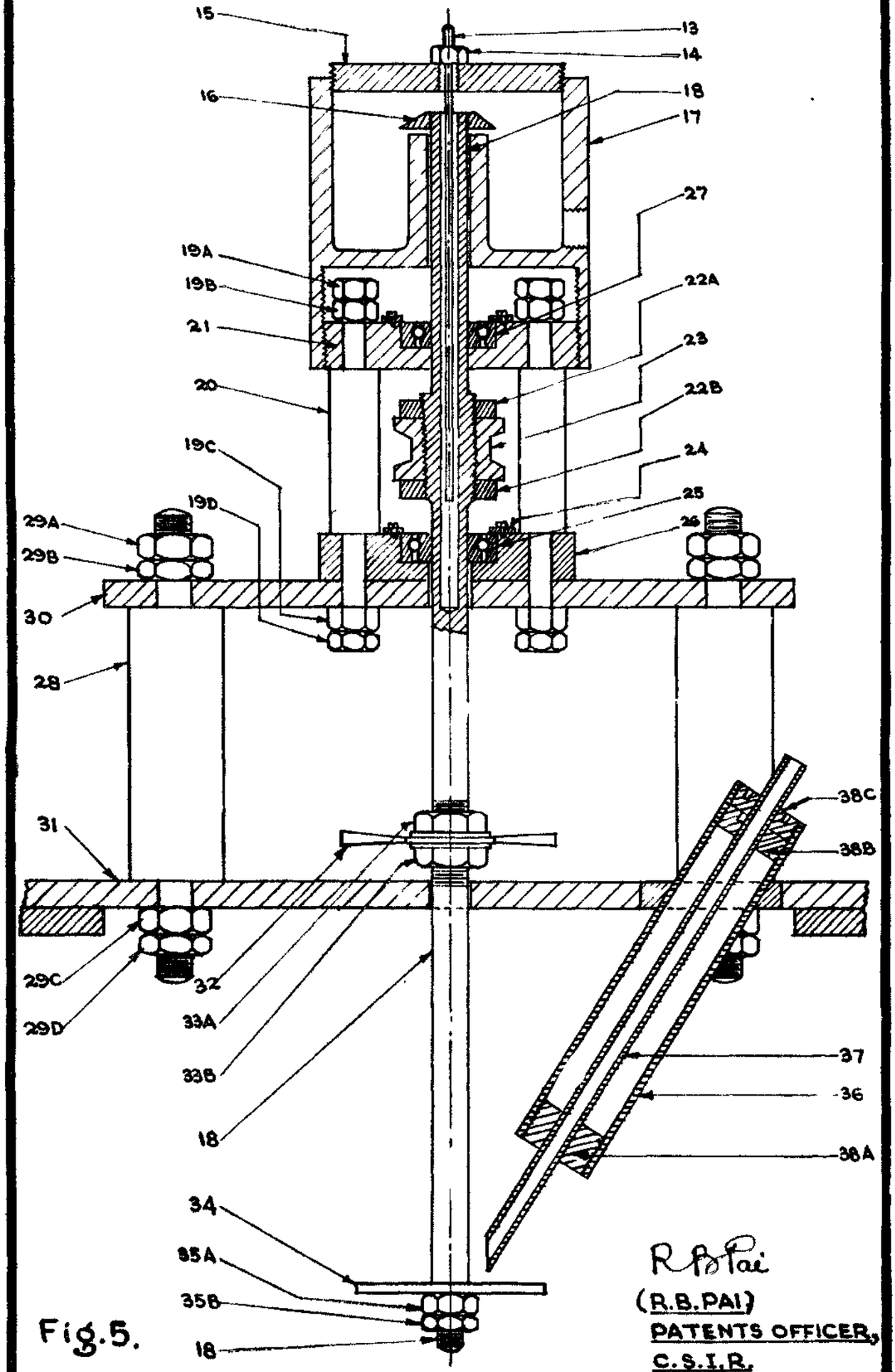

Fig. 5.

R B Pai

(R.B.PAI)

PATENTS OFFICER,

C.S.I.R.

DIPTI PRINTING CAL.-4. P-II/D/7/69 (Part-17) 104 Copies

PROVISIONAL SPECIFICATION

COUNCIL OF SCIENTIFIC & INDUSTRIAL RESEARCH

No. 96605

No. OF SHEETS:- 3

SHEET No. :- 3.

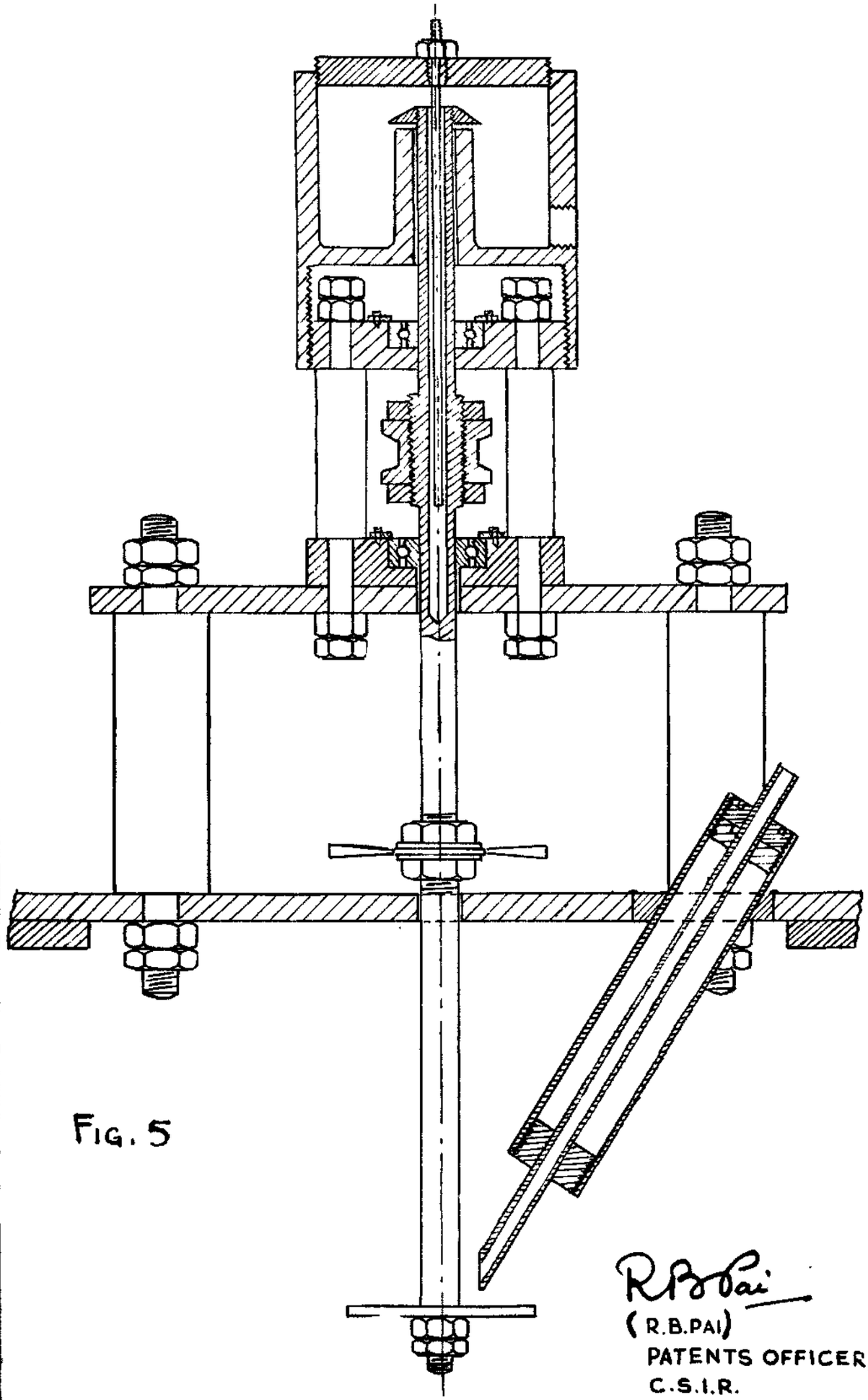

FIG. 5

R B Pai

(R.B.PAI)
PATENTS OFFICER,
C.S.I.R.

DIPTI PRINTING. CAL.4 P-II/D/7/69 (Part-17) 104 Copies